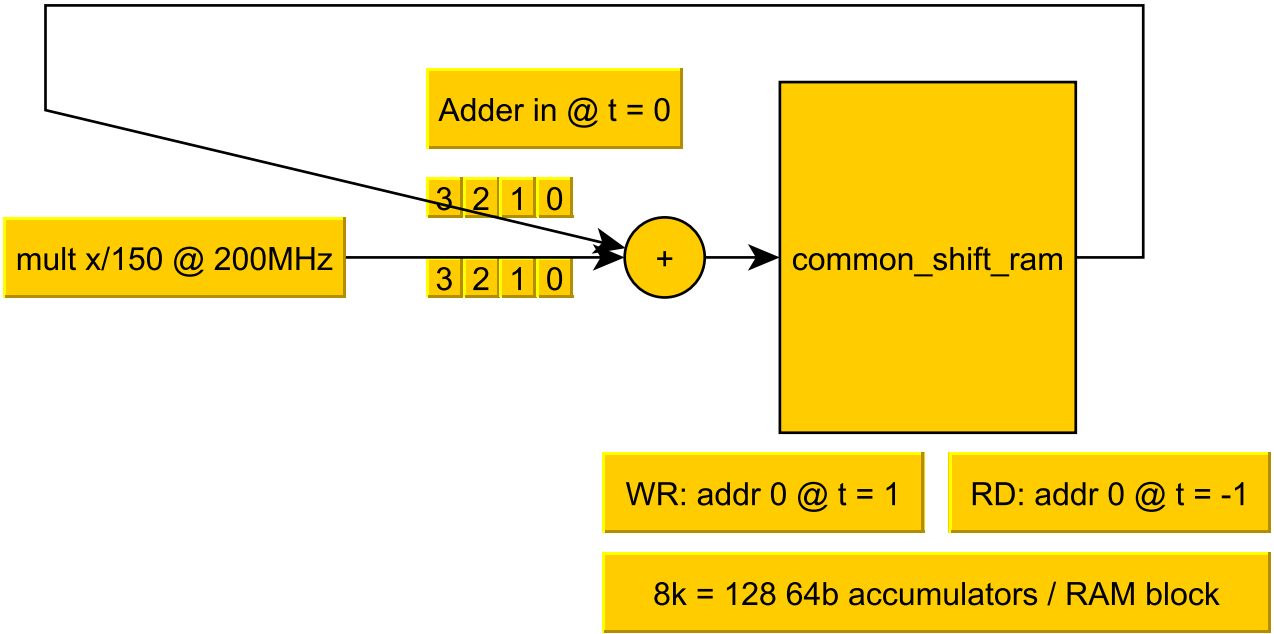
Adder in @ t = 0
3 2 1 0
mult x/150 @ 200MHz
3 2 1 0
+
common_shift_ram
WR: addr 0 @ t = 1
RD: addr 0 @ t = -1
8k = 128 64b accumulators / RAM block