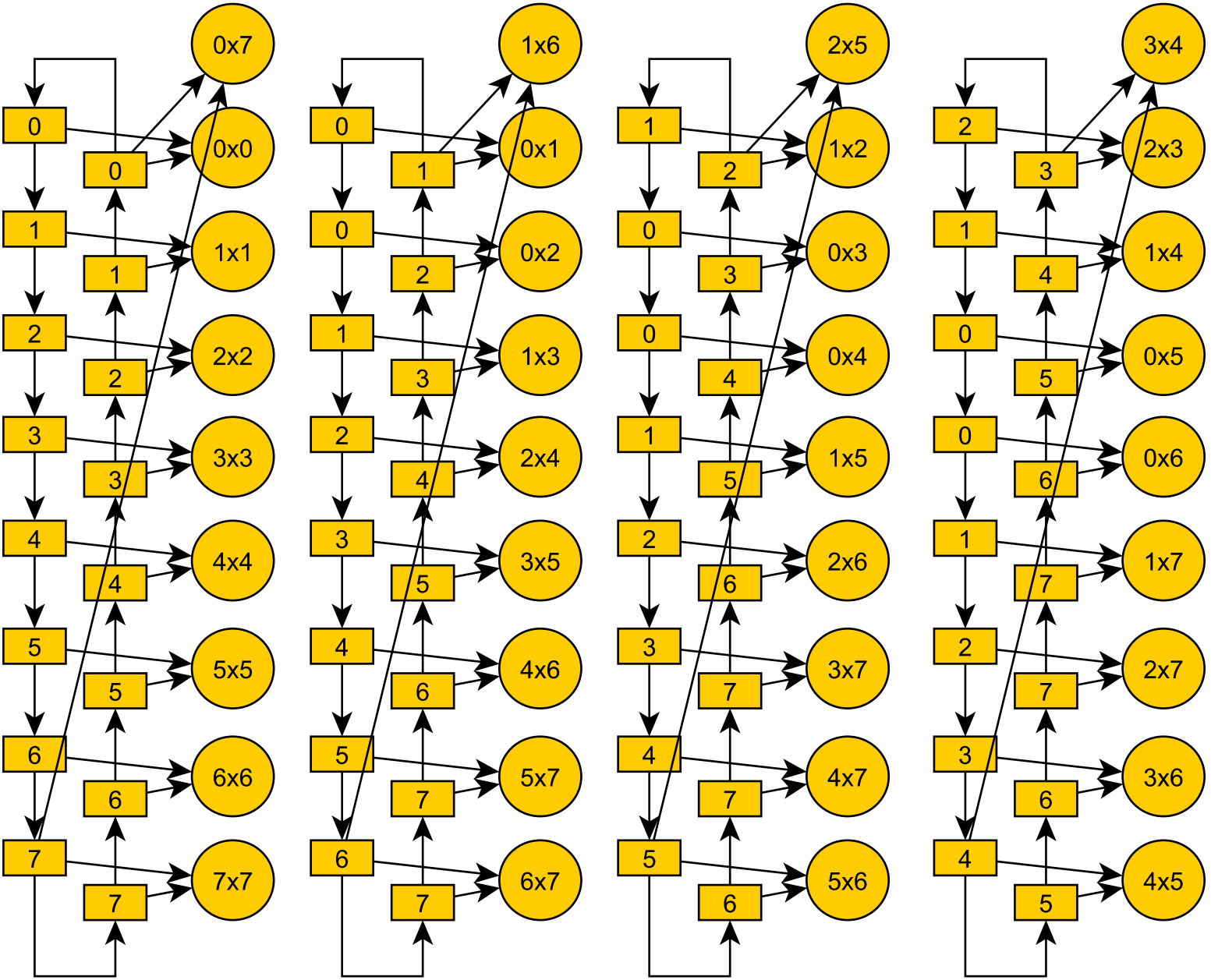
0x7
0x0
1x1
2x2
3x3
4x4
5x5
6x6
7x7
1x6
0x1
0x2
1x3
2x4
3x5
4x6
5x7
6x7
2x5
1x2
0x3
0x4
1x5
2x6
3x7
4x7
5x6
3x4
2x3
1x4
0x5
0x6
1x7
2x7
3x6
4x5