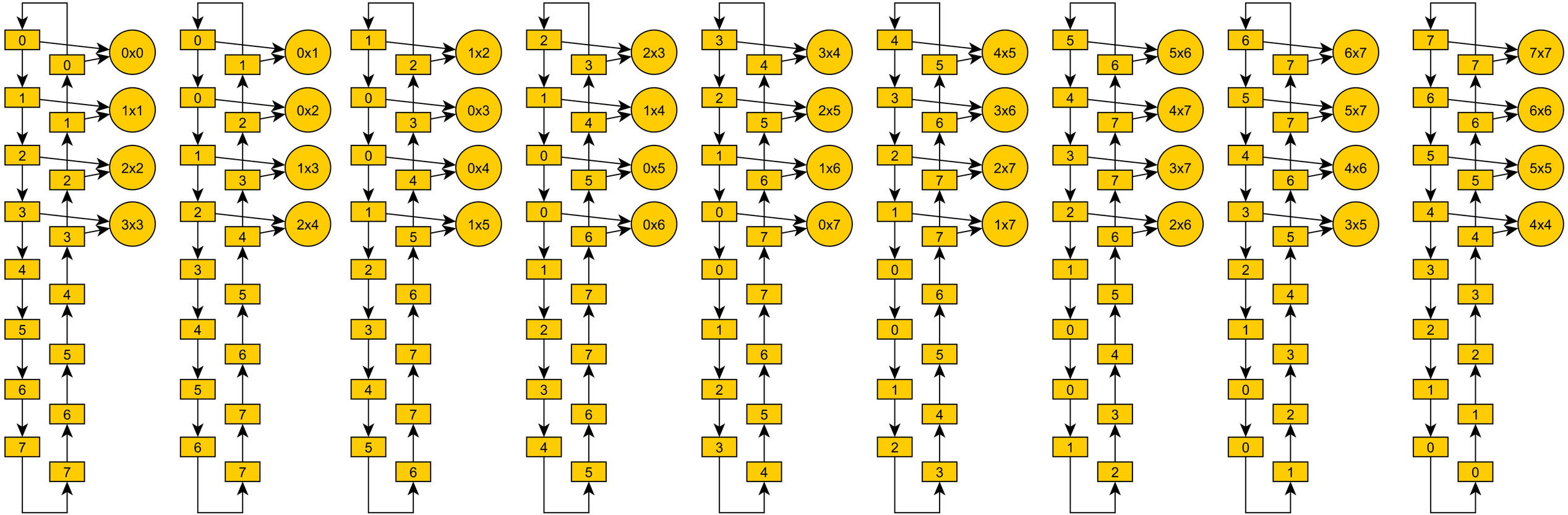
0x0
1x1
2x2
3x3
0x1
0x2
1x3
2x4
1x2
0x3
0x4
1x5
2x3
1x4
0x5
0x6
3x4
2x5
1x6
0x7
4x5
3x6
2x7
1x7
5x6
4x7
3x7
2x6
6x7
5x7
4x6
3x5
7x7
6x6
5x5
4x4